Coaxial Switch - S_C22DMP Series
DPDT, SMA, Pulse Latching, 1 Set Indicators

REV. B

STANDARD - 1 SET INDICATORS OPTION A - NO INDICATORS

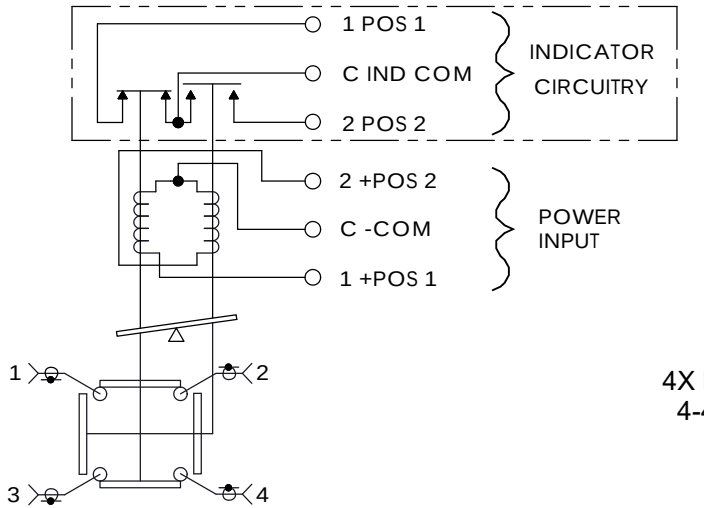

SCHEMATIC DIAGRAM
SHOWN IN POSITION 1

OPTION 1 - SOLDER TERMINALS

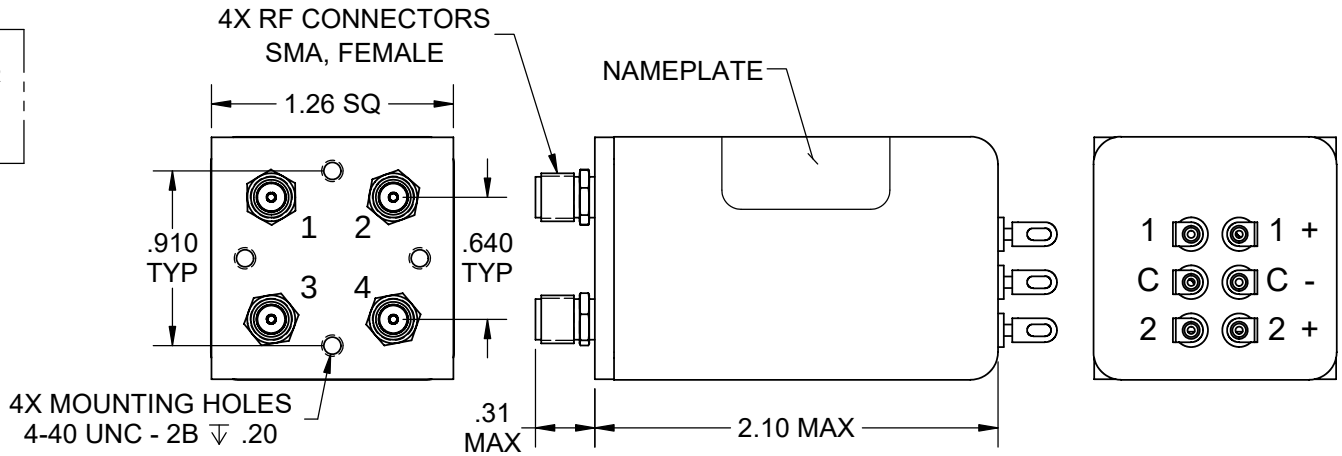

OPTION 4 - D-SUB

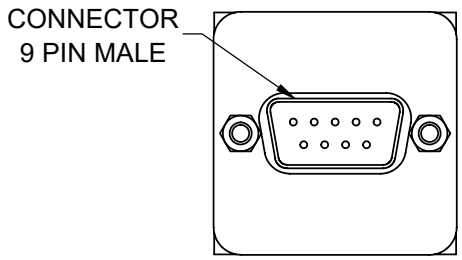

Frequency (GHz):	DC to 3.0	3.0 to 8.0	8.0 to 12.4	12.4 to 18.0
VSWR (Max):	1.2:1	1.3:1	1.4:1	1.5:1
Insertion Loss (Max):	0.2 dB	0.3 dB	0.4 dB	0.5 dB
Isolation (Min):	80 dB Min.	70 dB Min.	60 dB Min.	60 dB Min.
Power (Max):	100 WCW	75 WCW	60 WCW	45 WCW

RF Impedance: 50 ohms
Voltage: See Table
Current: See Table
Switching Time: 20 mS Max.
Pulse Duration: 50 mS Nominal

Material: Aluminum (RF Assy)
RF Contacts: Break Before Make
Finish: Iridite per MIL-DTL-5541, Type II Class 3
Cover Black

STYLE	ENVIRONMENT	OPERATING TEMPERATURE	NON-OPERATING TEMPERATURE	HUMIDITY
SO	SHELTERED	0°C to +70°C	-40°C to +100°C	0 to 95%
SW	OUTDOOR	-40°C to +85°C	-55°C to +100°C	0 to 100%
SA	AIRBORNE	-54°C to +85°C	-55°C to +100°C	0 to 100%

RoHS Compliant (except AIRBORNE)

OPTION	VOLTAGE	CURRENT @ 20º C
8	10 TO 14 VDC	400 mA Max @ 12 VDC
9	13 TO 18 VDC	350 mA Max @ 15 VDC
7	21 TO 28 VDC	300 mA Max @ 24 VDC
2	25 TO 32 VDC	250 mA Max @ 28 VDC

Model # ex. S[O]C22DMP [2] [A] [1]
Style | Voltage | Indicators | Interface